INNER DOORS

8660

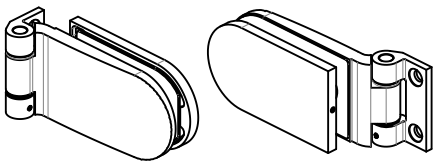

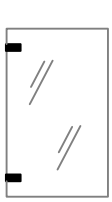

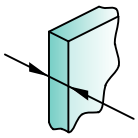

8-10-12

GLASS

Tools required

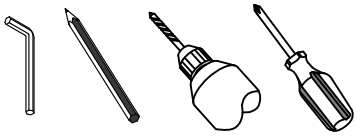

Fittings required

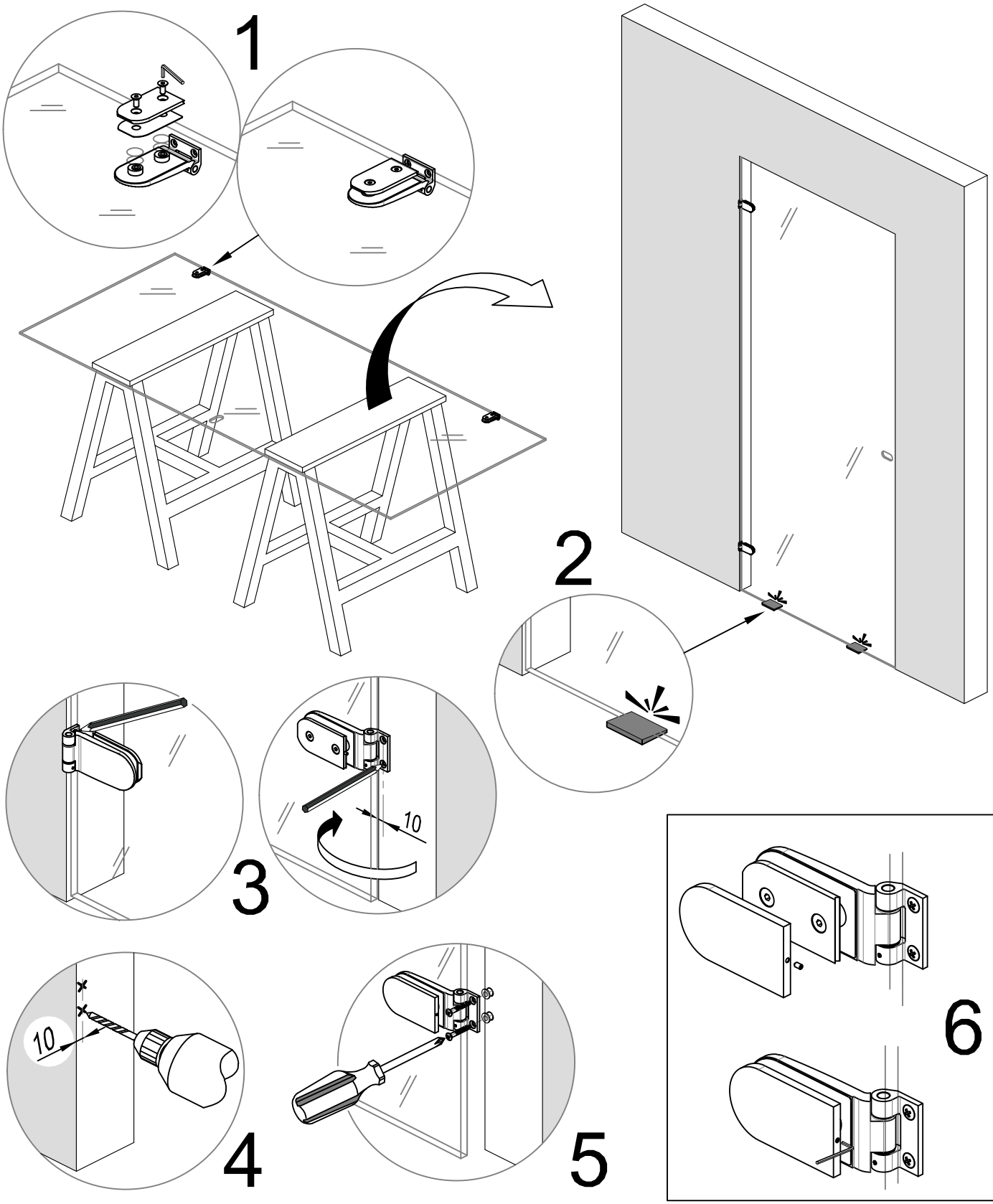

XC-IM-8660

INNER DOORS

8662

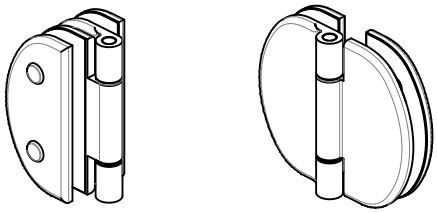

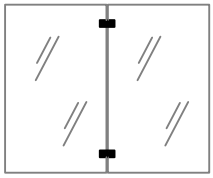

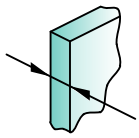

8-10-12

GLASS

Tools required

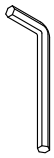

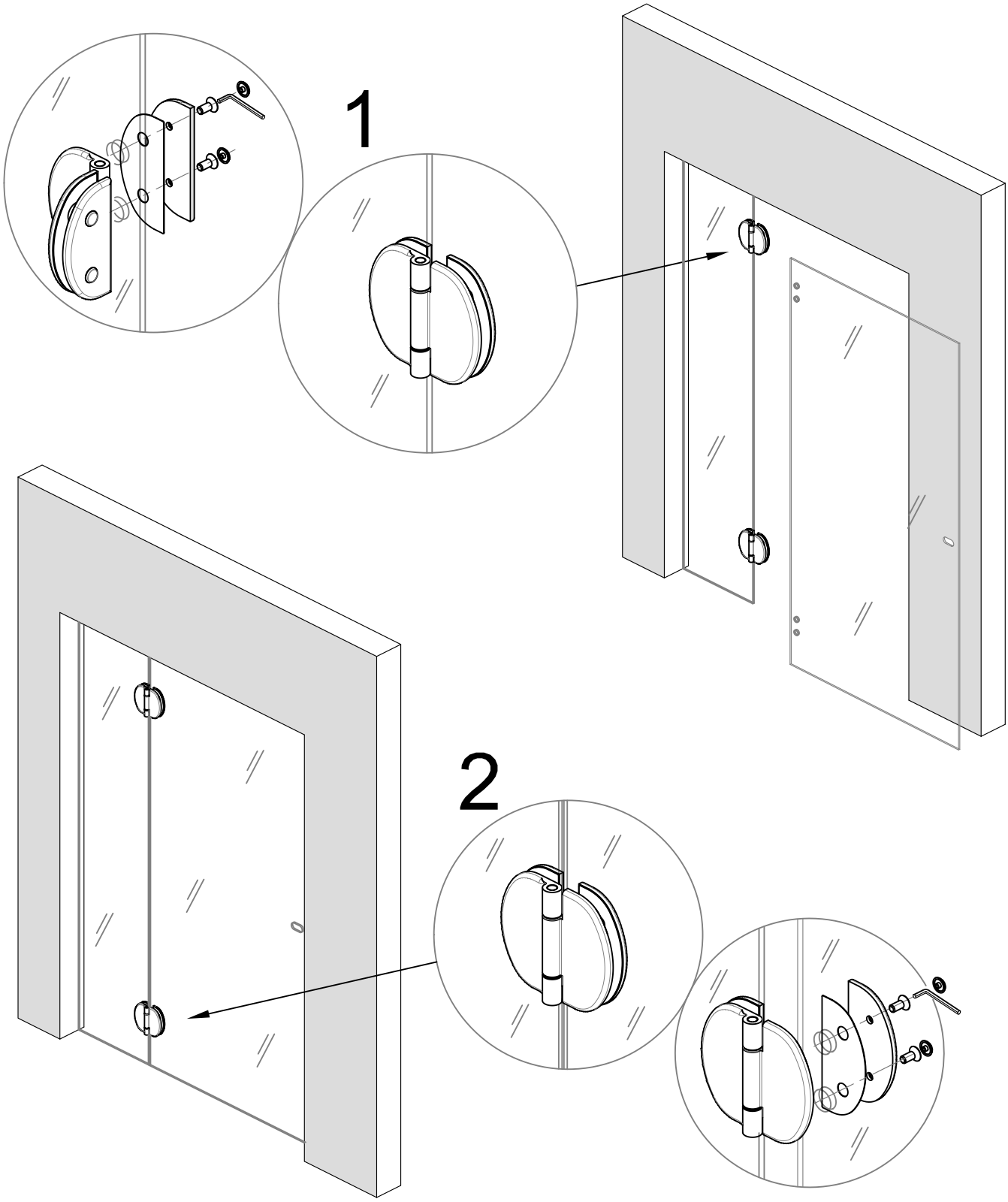

XC-IM-8662

INNER DOORS

8663

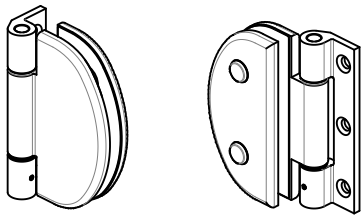

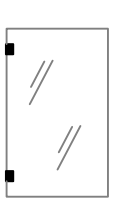

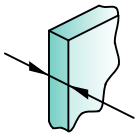

8-10-12

GLASS

Tools required

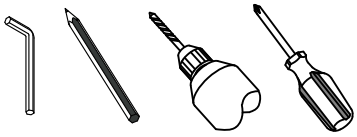

Fittings required

3 x

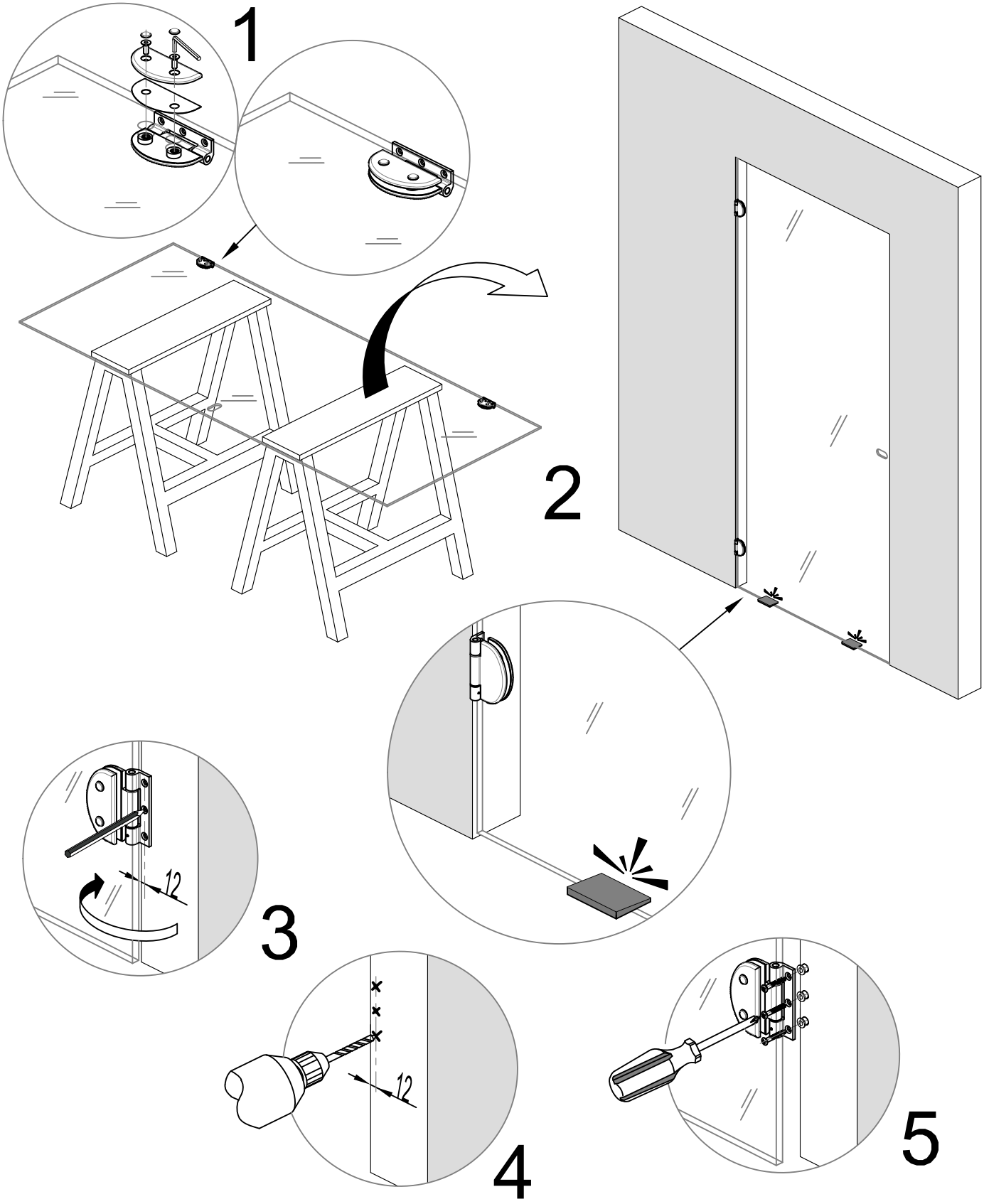

XC-IM-8663

INNER DOORS

8664

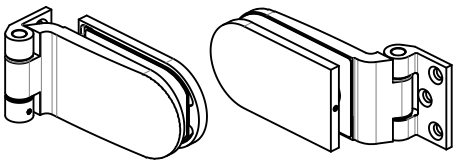

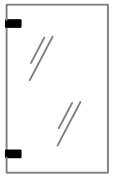

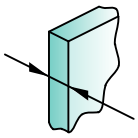

8-10-12

GLASS

Tools required

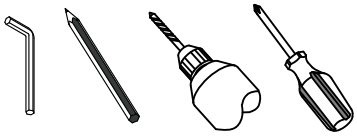

Fittings required

2 x

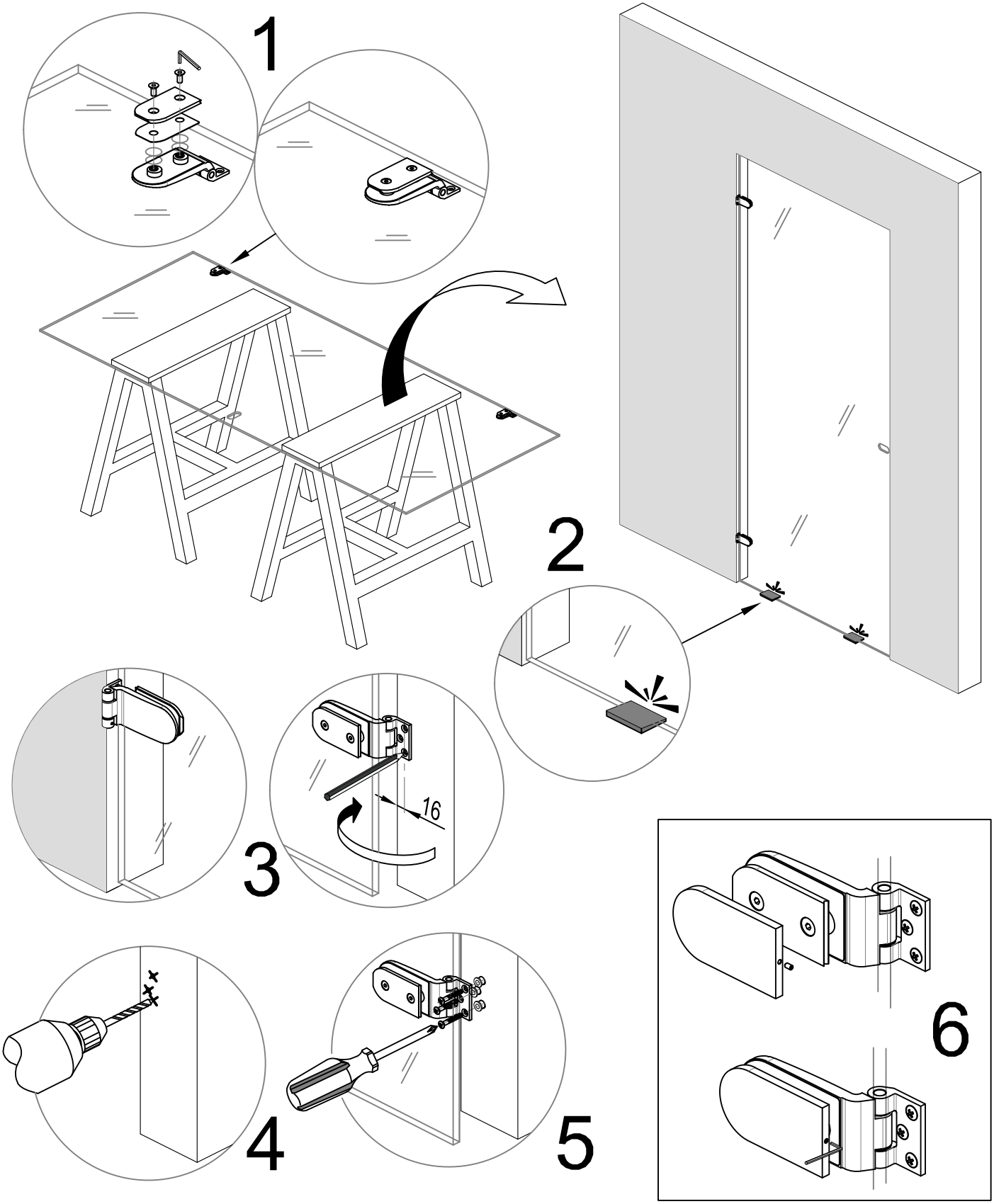

XC-IM-8664

INNER DOORS

8665

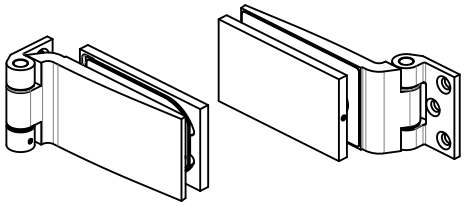

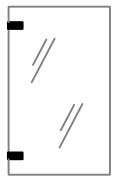

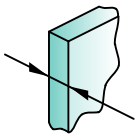

8-10-12

GLASS

Tools required

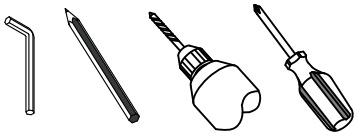

Fittings required

2 x

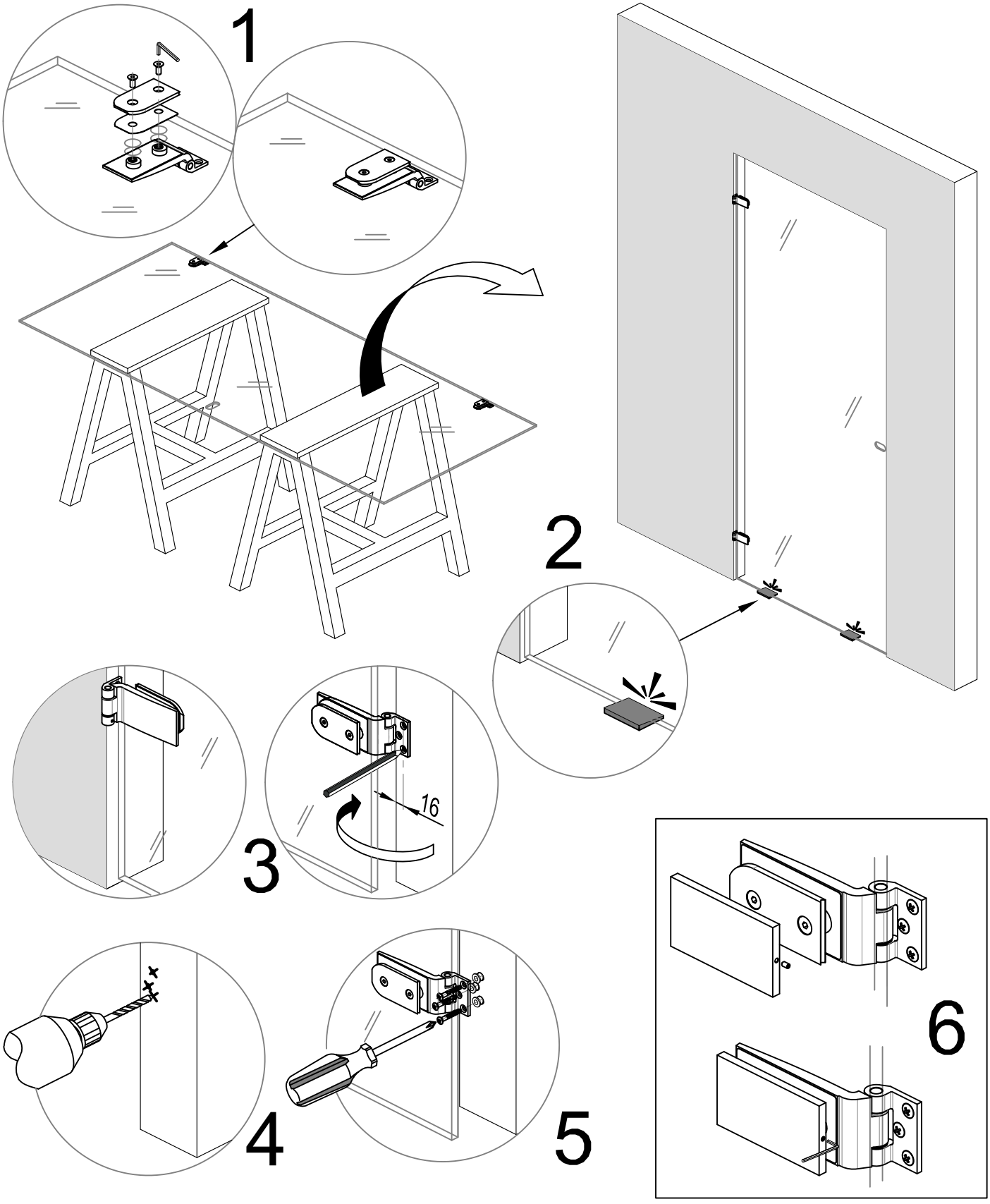

XC-IM-8665

INNER DOORS

8666

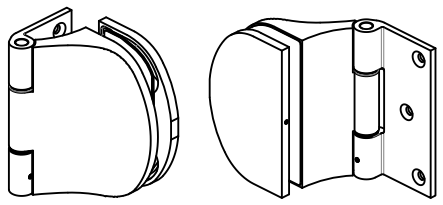

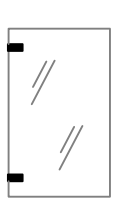

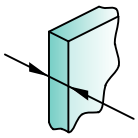

8-10-12

GLASS

Tools required

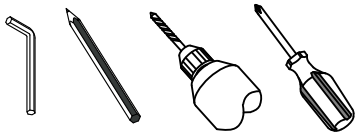

Fittings required

3 x

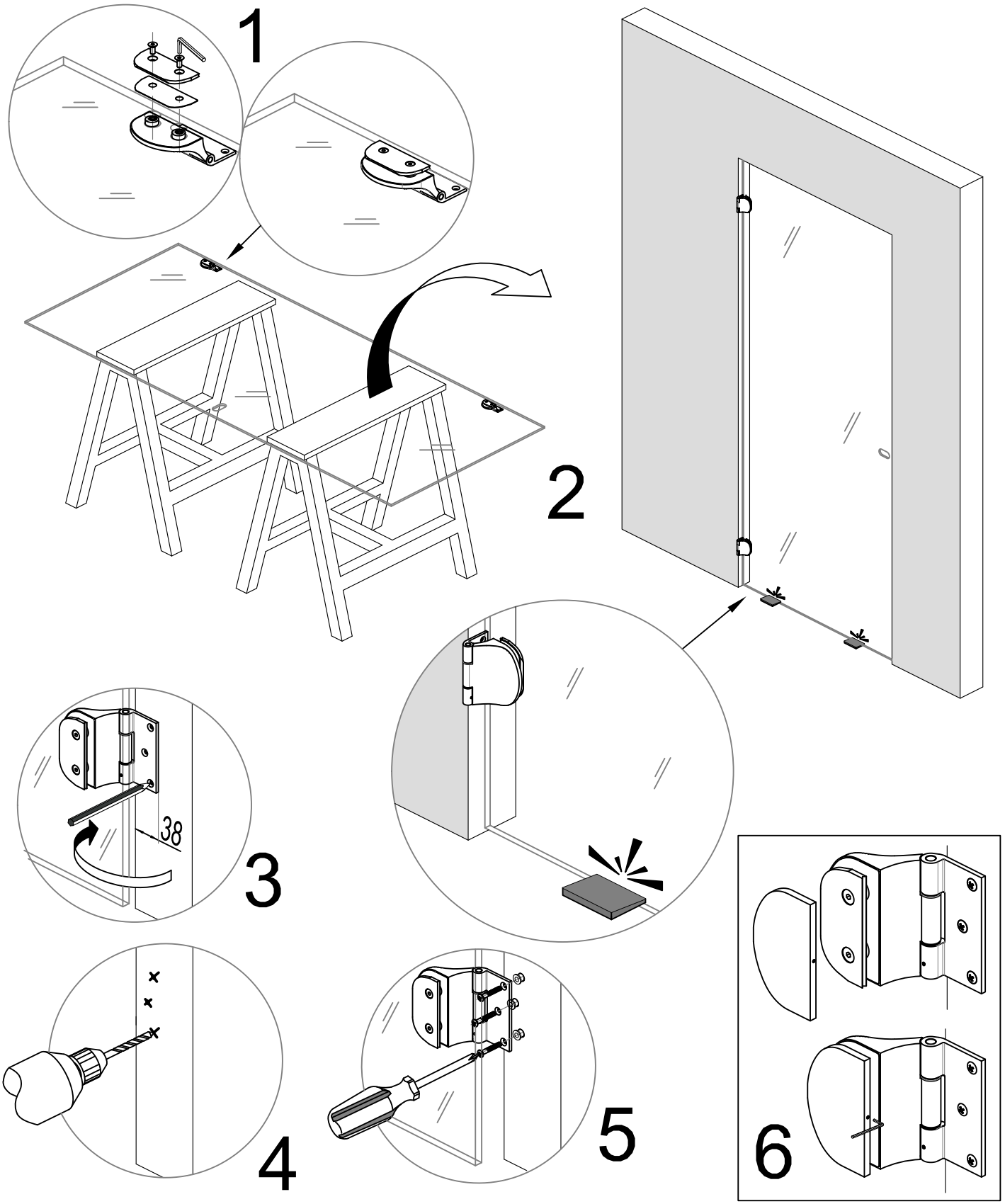

XC-IM-8666

INNER DOORS

8667

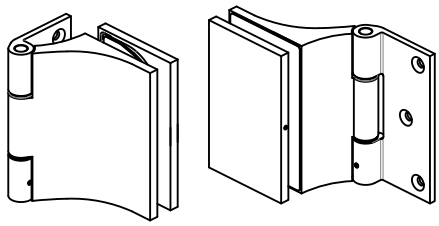

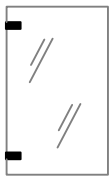

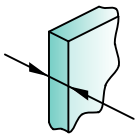

8-10-12

GLASS

Tools required

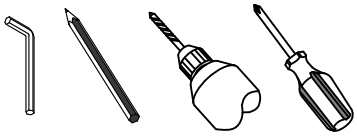

Fittings required

3 x

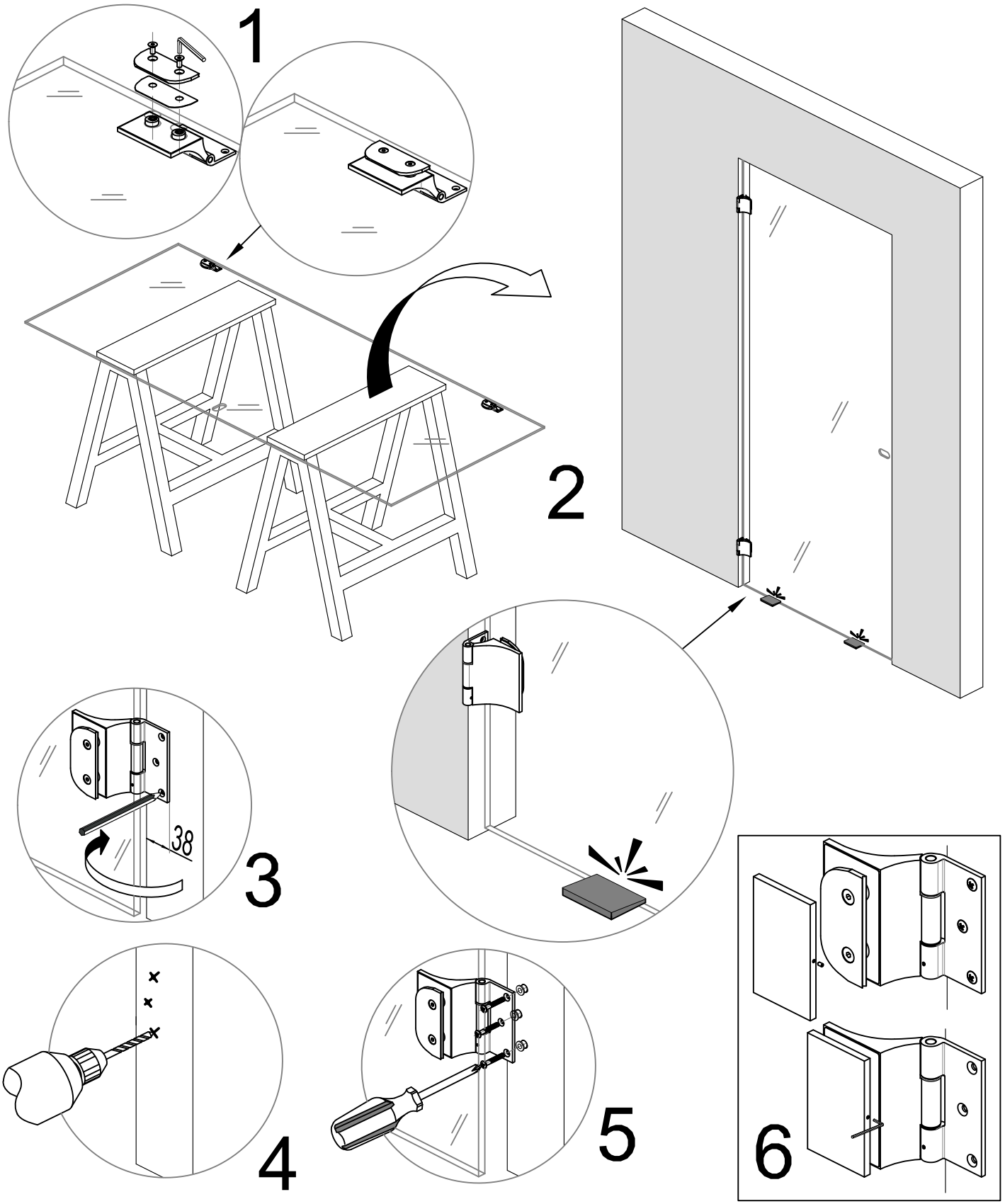

XC-IM-8667